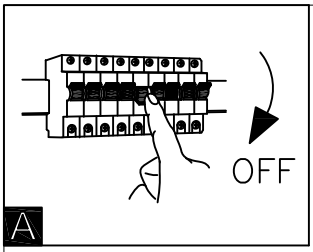
OFF
A

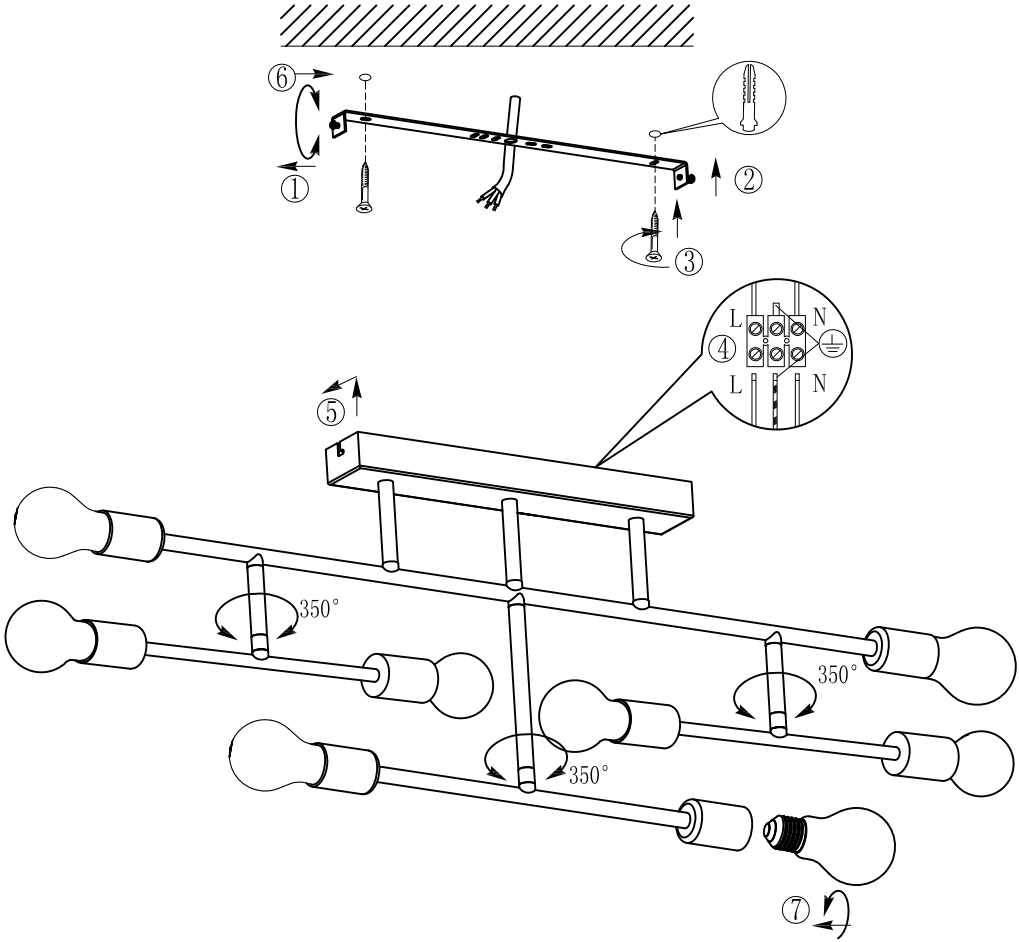
⑥
①
②
③
④
L
N
L
N
⑤
350°
350°
350°
⑦

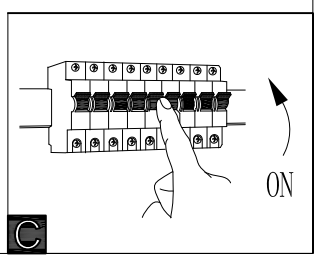
ON
C