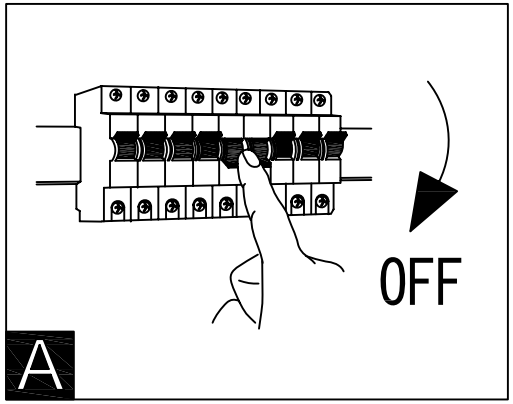
OFF
A

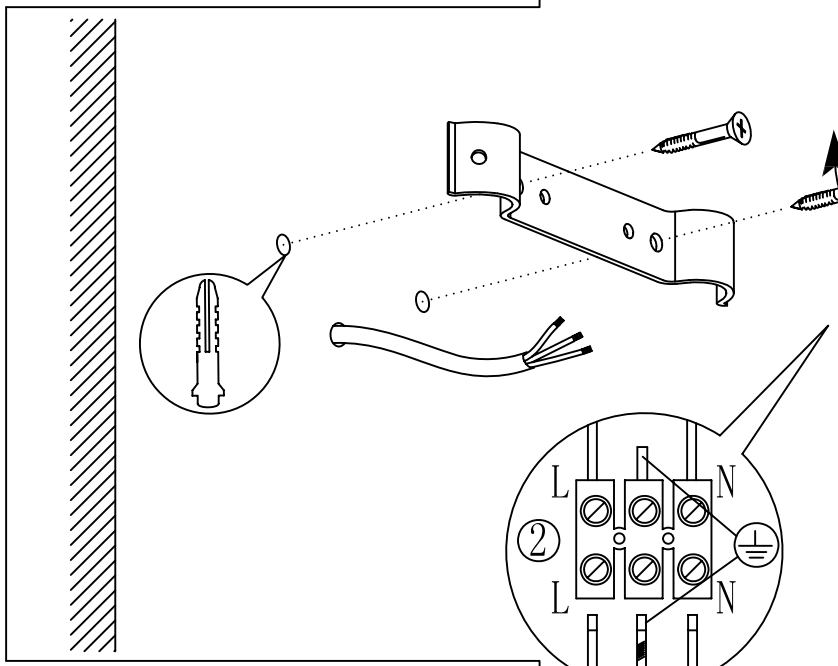
①
②
L
N
L
N

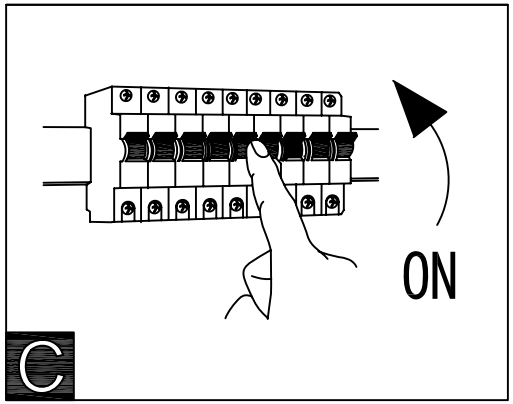
ON
C

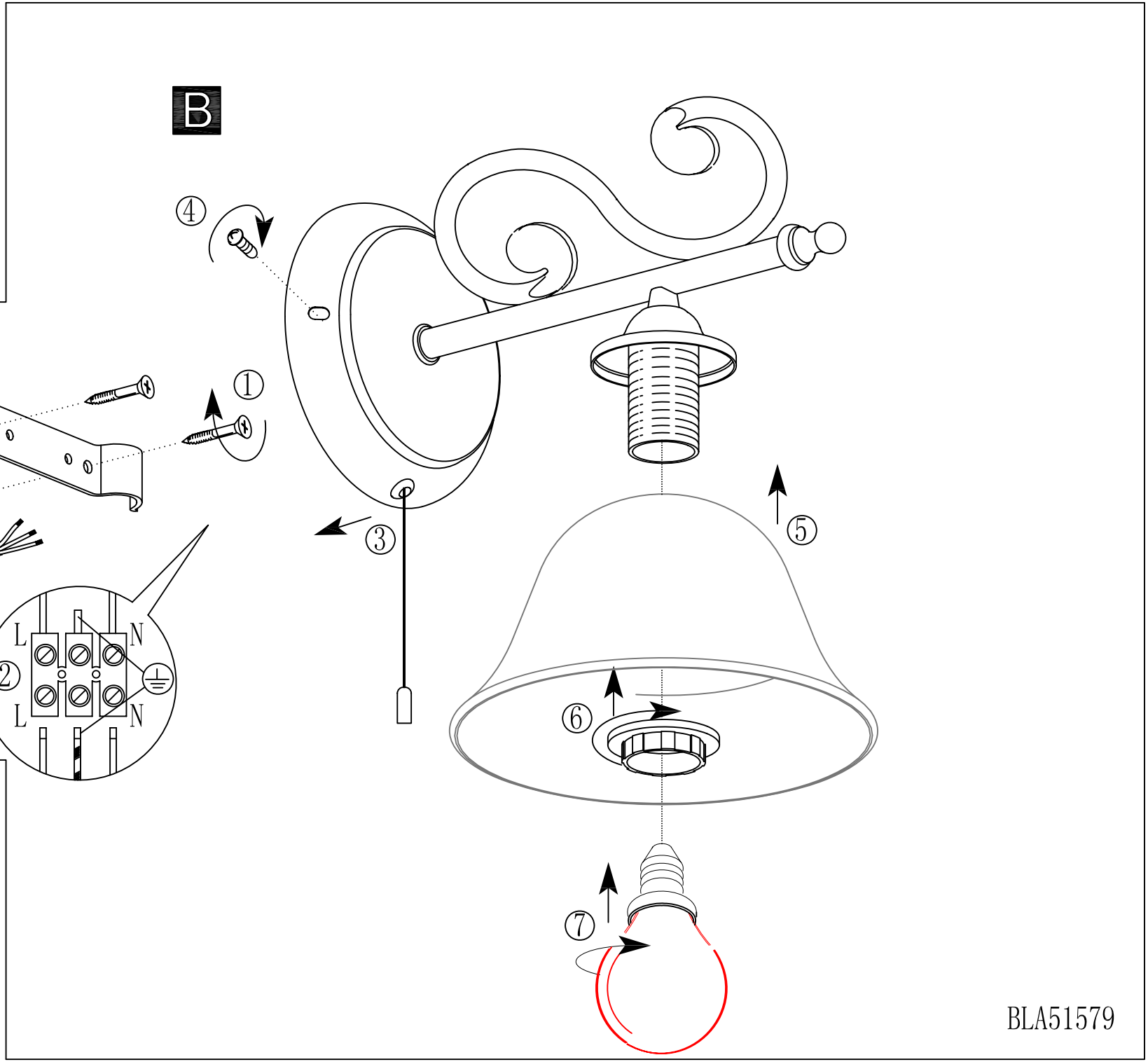
B
④
③
⑤
⑥
⑦
BLA51579