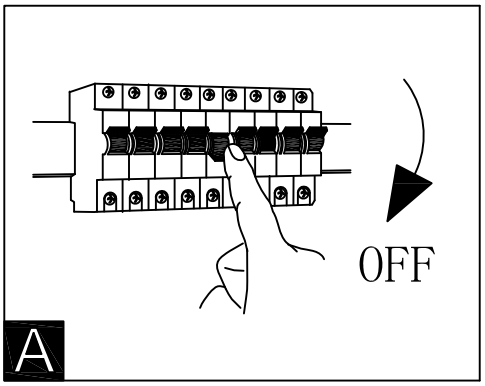
OFF
A

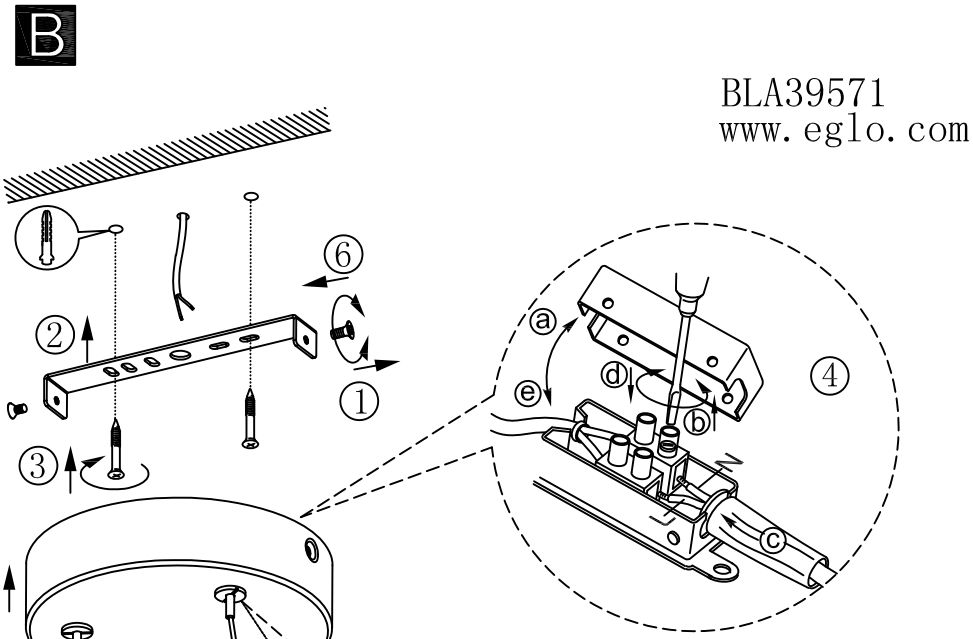
B
BLA39571
www.eglo.com
①
②
③
④
⑥
a
b
c
d
e
N
L

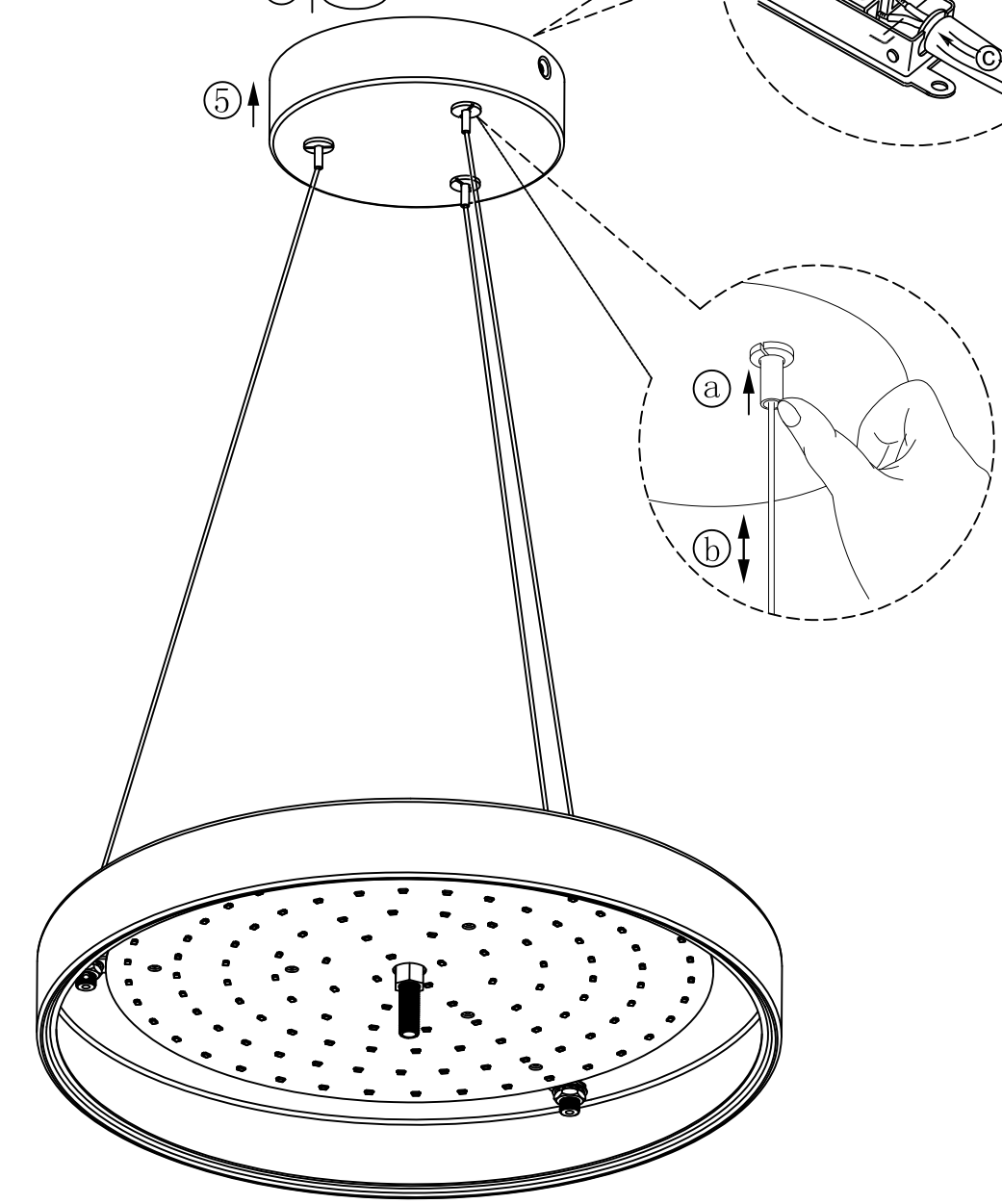
⑤
a
b

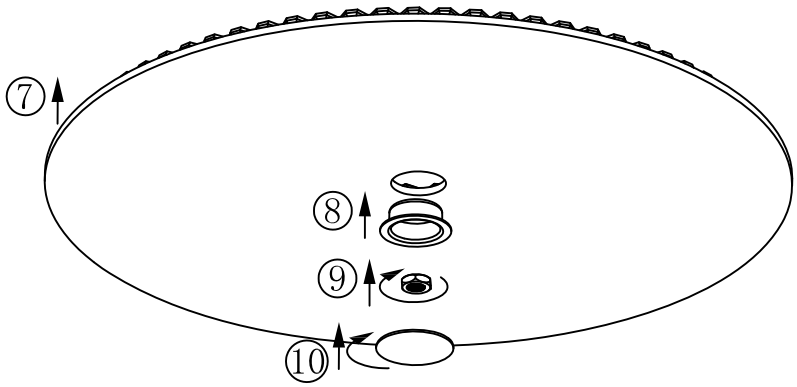
⑦
⑧
⑨
⑩

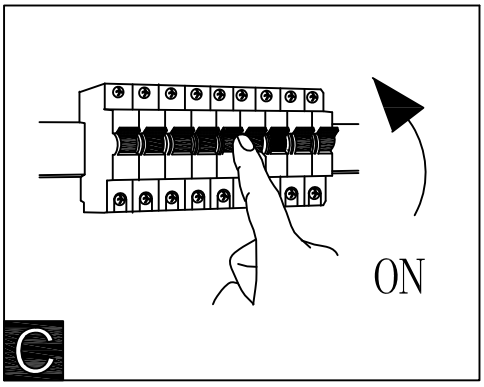
ON
C